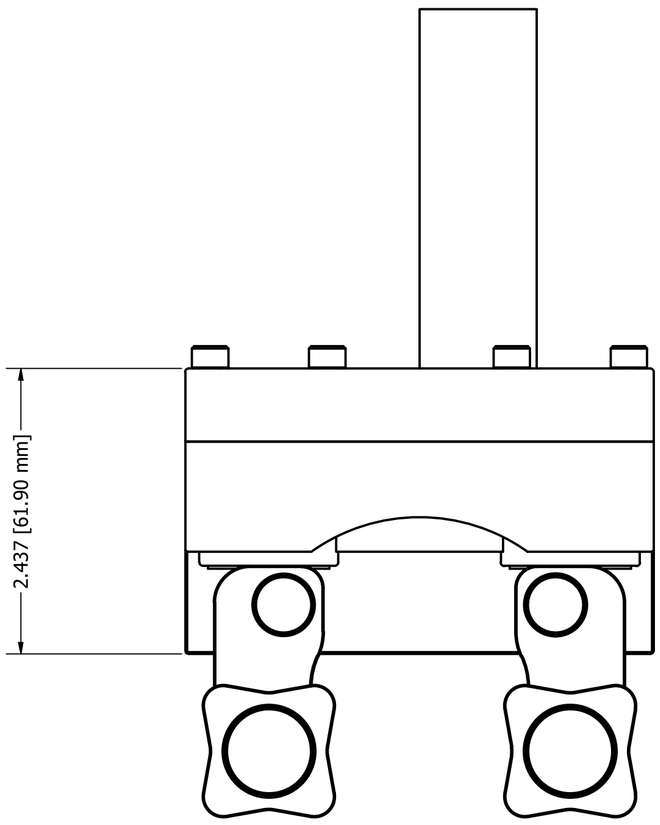
2.437 [61.90 mm]

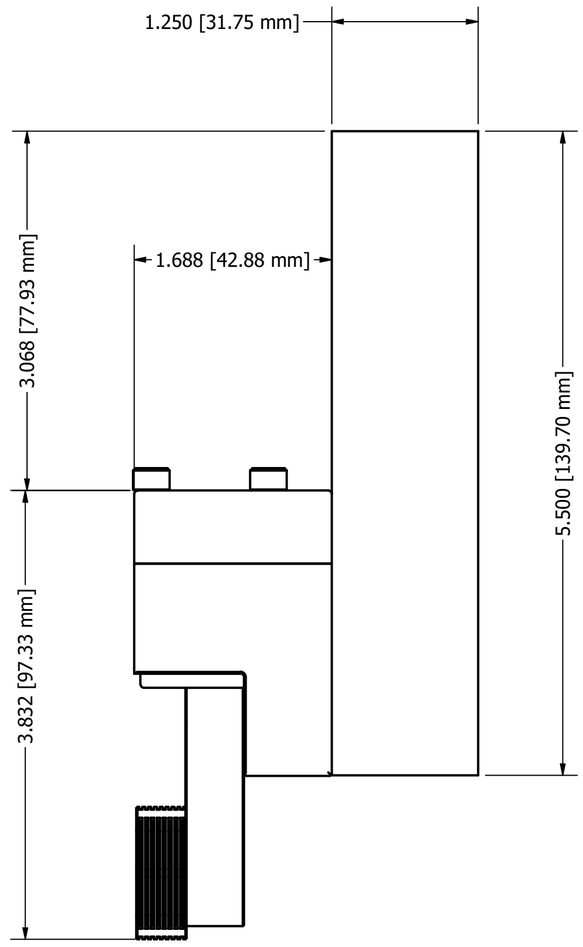
1.250 [31.75 mm]
1.688 [42.88 mm]
3.068 [77.93 mm]
3.832 [97.33 mm]
5.500 [139.70 mm]

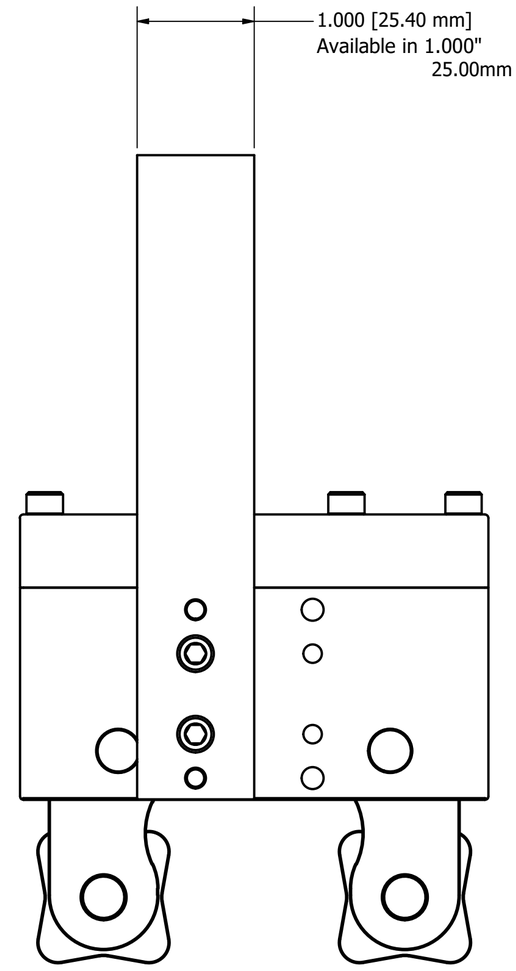
1.000 [25.40 mm]
Available in 1.000"
25.00mm