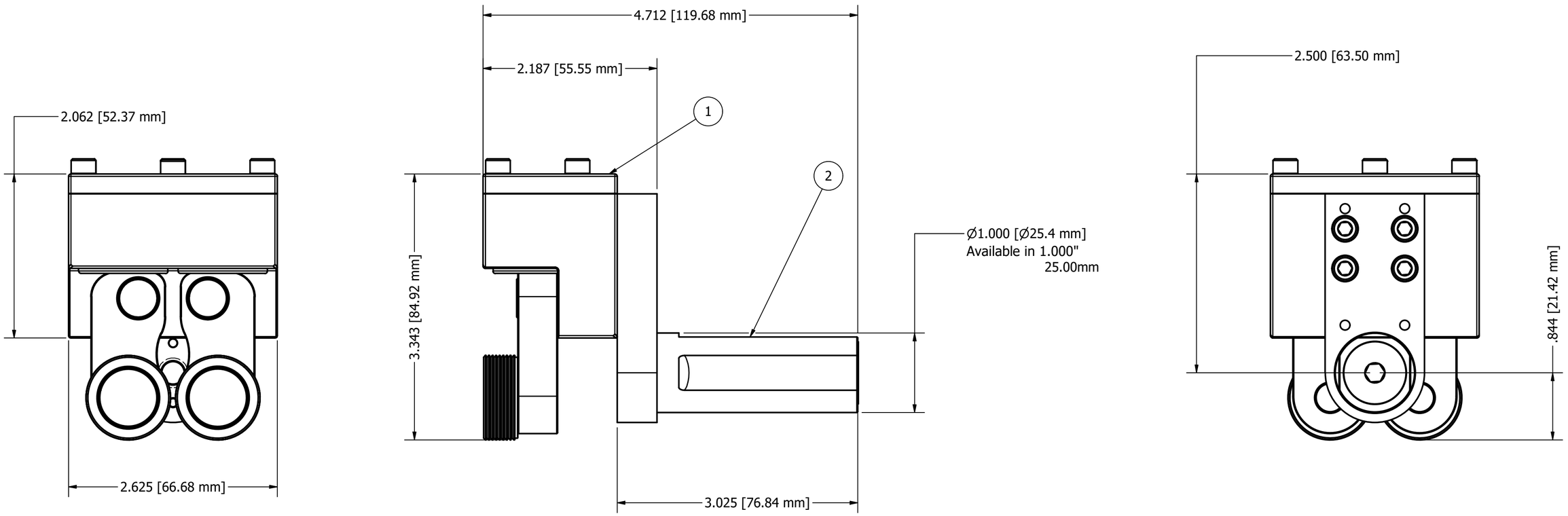
2.062 [52.37 mm]
2.625 [66.68 mm]
4.712 [119.68 mm]
2.187 [55.55 mm]
1
2
3.343 [84.92 mm]
3.025 [76.84 mm]
Ø1.000 [Ø25.4 mm]
Available in 1.000"
25.00mm
2.500 [63.50 mm]
.844 [21.42 mm]